1

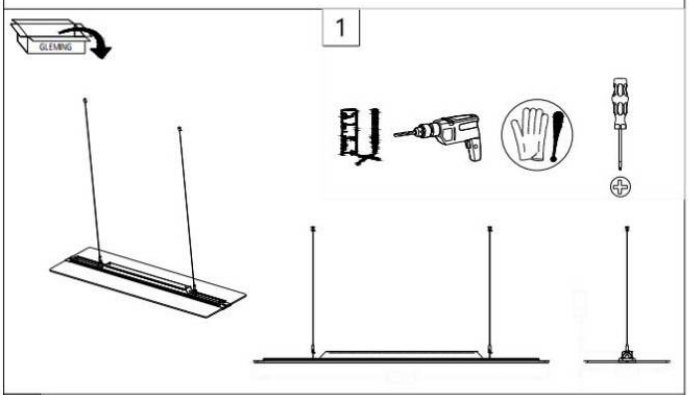

2

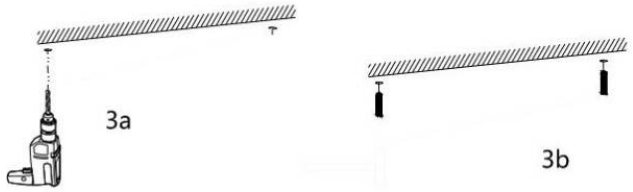

3

4

5

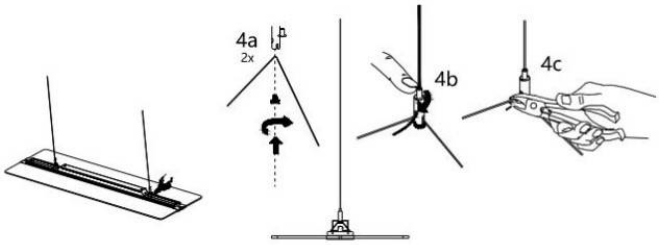

6

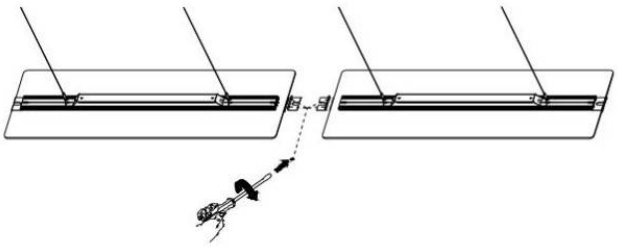

7

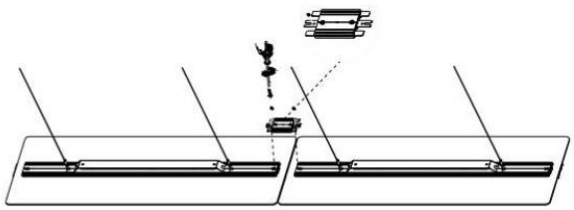

8

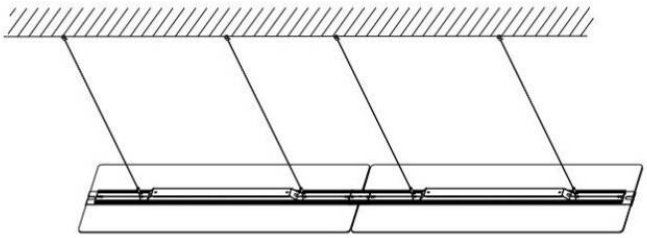

9

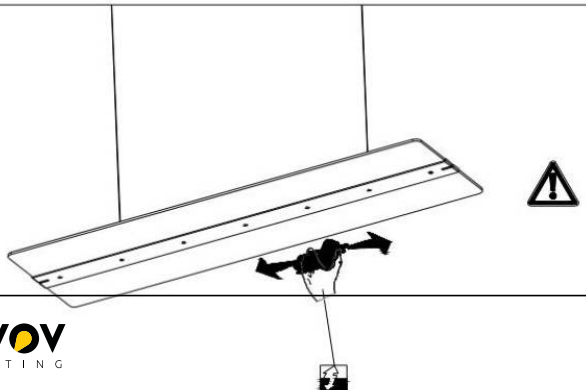

10

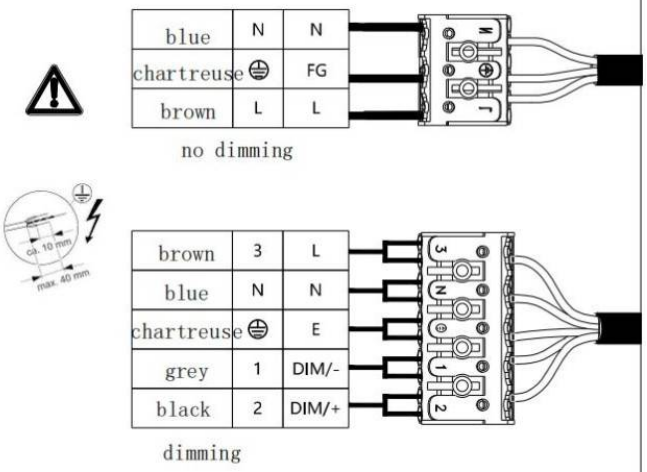

11 Installation and commissioning of lamps and any modifications to lamps should only be carried out by qualified electricians

Execute. Before completing any operation on the device, it must be disconnected from the power supply

The connection of. Hot swapping may damage the luminaire!

Beware of electric shock!